HDBRRS04042418

OL-4424

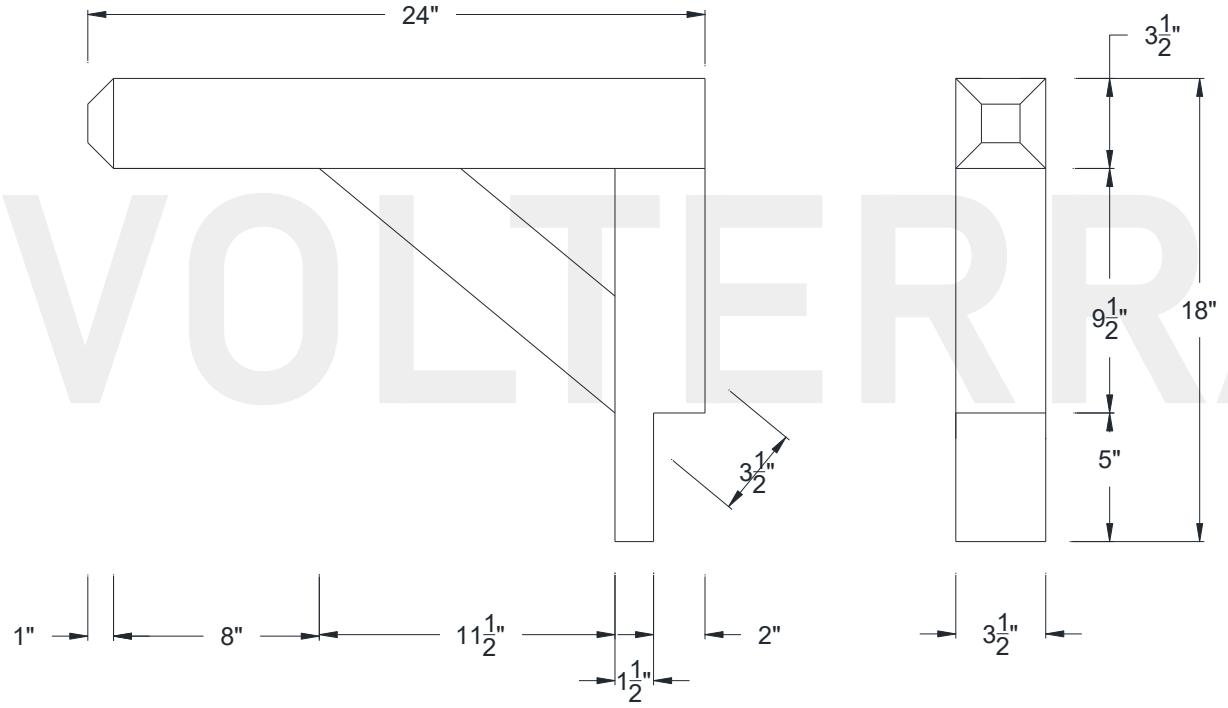

SIDE VIEW

FRONT VIEW

Category: Bracket ● Texture: Rough Sawn ● Product: HDF - High Density Foam

Volterra Architectural Products LLC -1902 North 22nd Avenue - Phoenix , AZ 85009

www.volterraproducts.com